Accessory Fitting Instructions

LED Fog Light Kit	
Kit Number	**Models Affected**
A9830080	Tiger 900 GT, Tiger 900 GT (LRH), Tiger 900 Rally, Tiger 900 GT Pro, Tiger 900 Rally Pro
LED Fog Light Conversion Kit	
Kit Number	**Models Affected**
A9830210	Tiger 900 GT Pro, Tiger 900 Rally Pro

Note:

- **The LED Fog Light Conversion Kit A9830210 can only be fitted in conjunction with the accessory Upper Engine Bar Kit A9780051.**

Thank you for choosing this Triumph genuine accessory kit. This accessory kit is the product of Triumph's use of proven engineering, exhaustive testing, and continuous striving for superior reliability, safety and performance.

Completely read all of these instructions before commencing the installation of the accessory kit in order to become thoroughly familiar with the kit's features and the installation process.

These instructions should be considered a permanent part of your accessory kit, and should remain with it even if your accessory equipped motorcycle is subsequently sold.

Publication part number 9901625 issue 1
© Triumph Designs Ltd. 2020

Parts Supplied: A9830080

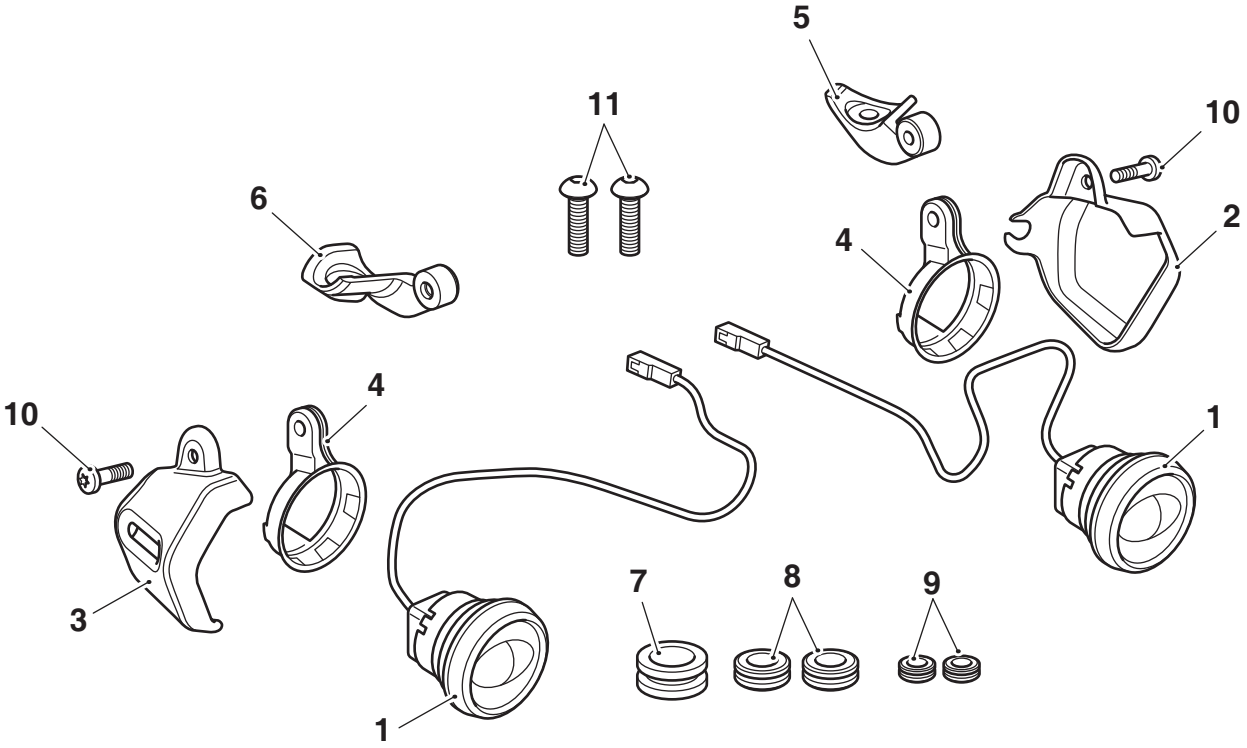

1.	Fog light, LED	2 off	7.	Grommet, Ø 26 mm	1 off
2.	Shroud, left hand	1 off	8.	Grommet, Ø 20 mm	2 off
3.	Shroud, right hand	1 off	9.	Grommet, Ø 13 mm	2 off
4.	Plastic clamp	2 off	10.	Fixing, M5 x 20 mm	2 off
5.	Mounting clamp, left hand	1 off	11.	Fixing, M6 x 20 mm	2 off
6.	Mounting clamp, right hand	1 off			

Parts Supplied: A9830210

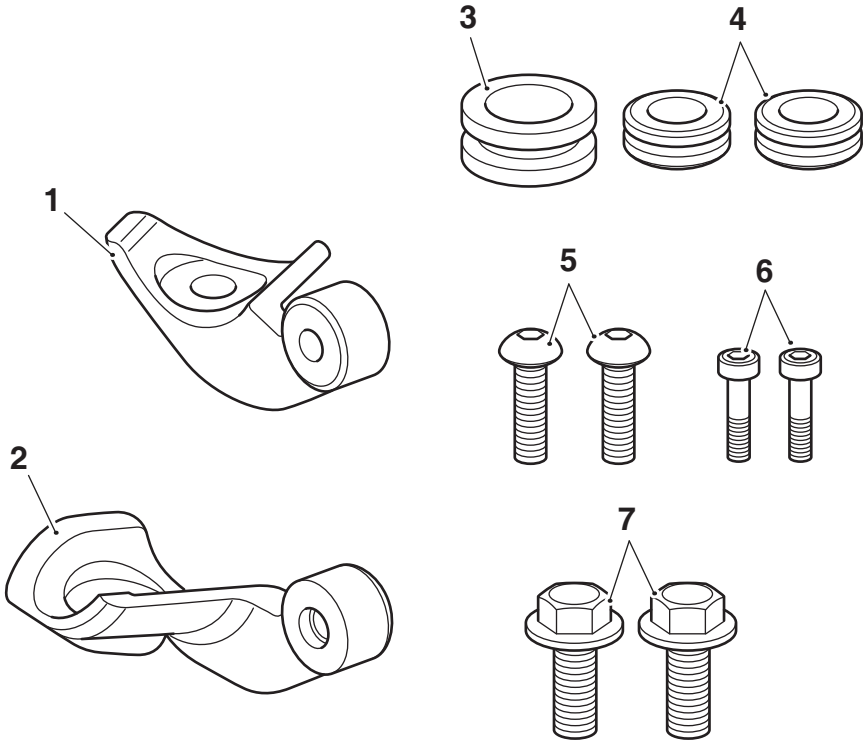

1.	Mounting clamp, left hand	1 off	5.	Fixing, M6 x 20 mm	2 off
2.	Mounting clamp, right hand	1 off	6.	Fixing, M5 x 20 mm	2 off
3.	Grommet, Ø 26 mm	1 off	7.	Fixing, M8 x 20 mm encapsulated	2 off
4.	Grommet, Ø 20 mm	2 off			

Warning

Fit only genuine Triumph accessories to those models approved by Triumph as listed in the associated Triumph fitting instructions. The accessory kits covered in this instruction are designed for use on specific models of Triumph motorcycle. The accessory kits and the models applicable are listed at the start of the instruction. They should never be fitted to any other Triumph model or to any other manufacturer's motorcycle. Fitting an accessory kit to a Triumph model not listed, or to any other manufacturer's motorcycle will affect the performance, stability and handling of the motorcycle. This may affect the rider's ability to control the motorcycle and could result in an accident causing severe injuries or death.

Warning

Always have Triumph approved parts, accessories and conversions fitted by a trained technician of an authorised Triumph dealer. The fitment of parts, accessories and conversions by a technician who is not of an authorised Triumph dealer may affect the handling, stability or other aspects of the motorcycle's operation which may result in loss of motorcycle control and an accident.

Warning

Always ensure that the newly installed wiring does not chafe against other parts of the motorcycle such that it may be rubbed through and cause an electrical problem. In addition, always ensure that the newly installed wiring will not restrict steering movement. Both conditions are hazardous and could give rise to a dangerous riding condition resulting in a fire, loss of motorcycle control and an accident.

Warning

Throughout this operation, ensure that the motorcycle is stabilized and adequately supported to prevent risk of injury from the motorcycle falling.

Warning

A torque wrench of known accurate calibration must be used when fitting this accessory kit. Failure to tighten any of the fasteners to the correct torque specification may affect motorcycle performance, handling and stability. This may result in loss of motorcycle control and an accident.

Note:

- **Triumph offers a broad range of approved genuine accessories for your motorcycle.**
  We cannot therefore cover all possible equipment variations in these instructions. For removal and installation of Triumph Genuine Accessories always refer to the instructions supplied with the respective accessory kit.
  To obtain additional copies of any Triumph accessory instructions, visit www.triumphinstructions.com or contact your authorised Triumph dealer.

1. Remove the rider and passenger seats as described in the Service Manual.
2. Disconnect the battery, as described in the Service Manual.
3. Remove the front beak as described in the Service Manual.

Fitment of the Fog Light Kit A9830080

4. Collect the fog lights and plastic clamps from the kit.

Note:

- **When fitting the plastic clamps to the fog lights the E marking on the fog light lens should always be positioned centrally at the top of the fog light, in line with the plastic clamp mounting, as shown below.**

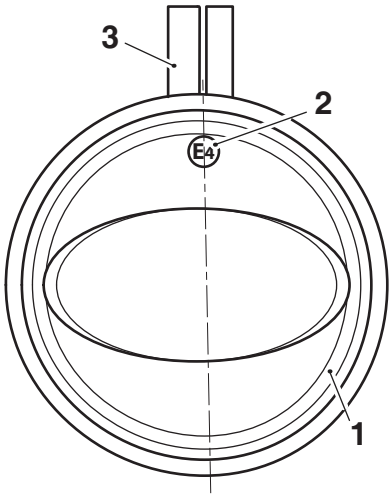

1. **Fog light**
2. **E marking**
3. **Plastic clamp mounting**

5. Fit the plastic clamps onto the fog lights as shown ensuring the lower section of the plastic clamp locates in the recess in the underside of the fog light body.

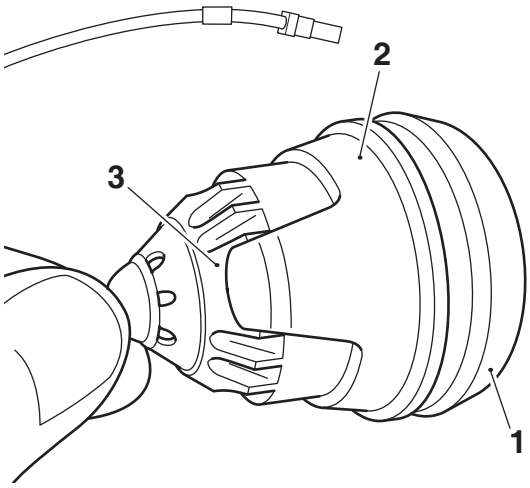

1. **Fog light**
2. **Plastic clamp, lower section**
3. **Recess, fog light body**

Note:

- **If upper engine bars are fitted to the motorcycle, continue from step 6. If upper engine bars are being fitted along with the fog light kit, continue from step 9.**

6. Remove the fixings securing the upper engine bars to the front mounting bracket. Retain fixings for reuse.

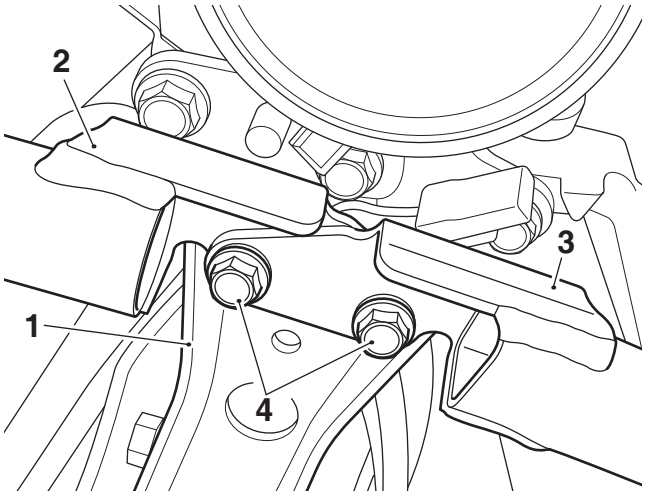

1. **Front mounting bracket**
2. **Upper engine bar right hand**
3. **Upper engine bar left hand**
4. **Fixings**

7. Remove the front and rear clamp bolts securing the right hand side upper engine bar to the lower engine bar. Remove upper engine bar and retain with the fixings for reuse. Repeat for the left hand side.

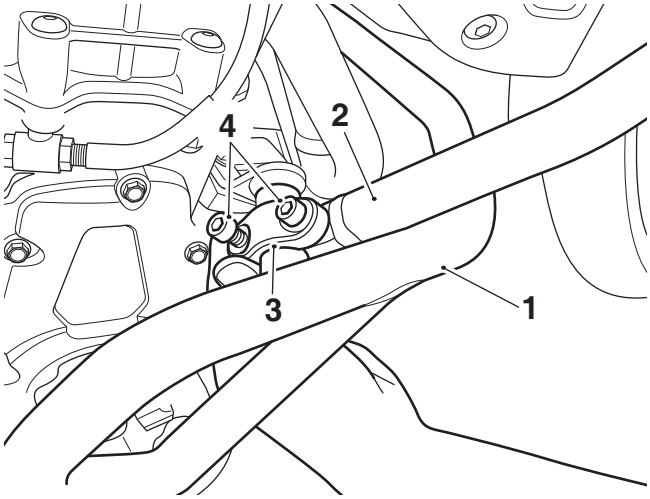

1. **Lower engine bar**
2. **Upper engine bar, right hand**
3. **Clamp**
4. **Fixings**

8. Remove the fixings securing the front mounting bracket and remove the mounting bracket. Retain mounting bracket and fixings for reuse.

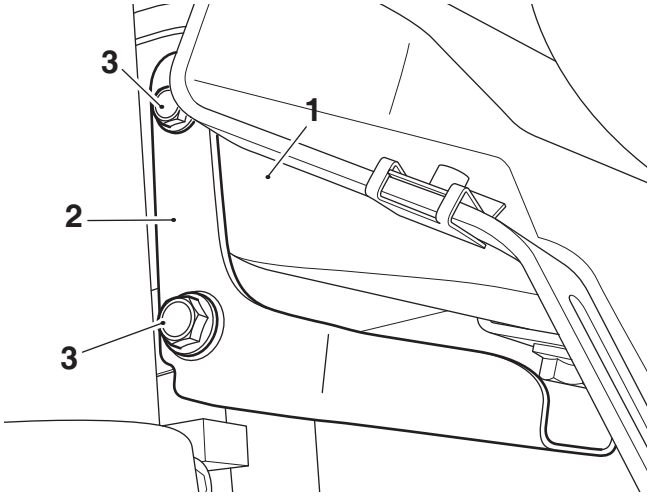

1. **Subframe mounting**
2. **Front mounting bracket**
3. **Fixings**

9. Fit the Ø 26 mm grommet from the kit into the front mounting bracket from the upper engine bar kit, as shown.

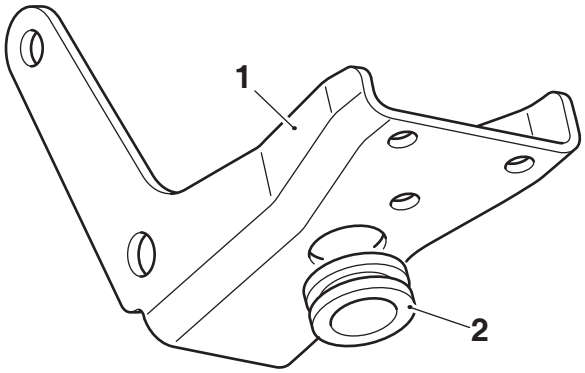

1. **Front mounting bracket**
2. **Grommet, Ø 26 mm**

10. Unclip the fog light connectors from the cable tidy moulding located rearward of the horn and remove the blanking plugs from the fog light connectors on the main wiring harness. Retain the blanking plugs for reuse if the motorcycle is to be returned to its original condition.

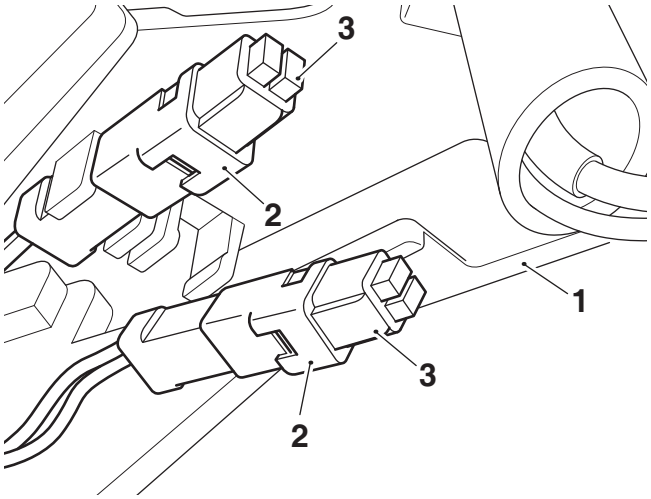

1. **Cable tidy moulding**
2. **Fog light connectors**
3. **Blanking plugs**

11. Route both fog light harness connectors through the grommet in the mounting bracket.

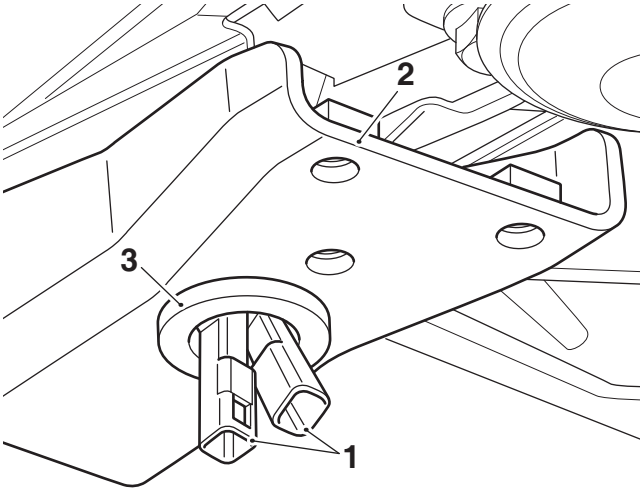

1. **Fog light harness connectors**
2. **Mounting bracket**
3. **Grommet, Ø 26 mm**

12. Refit the front mounting bracket onto the subframe mounting as shown. Secure with the original fixings and lock nuts. Tighten the fixings to **30 Nm**.

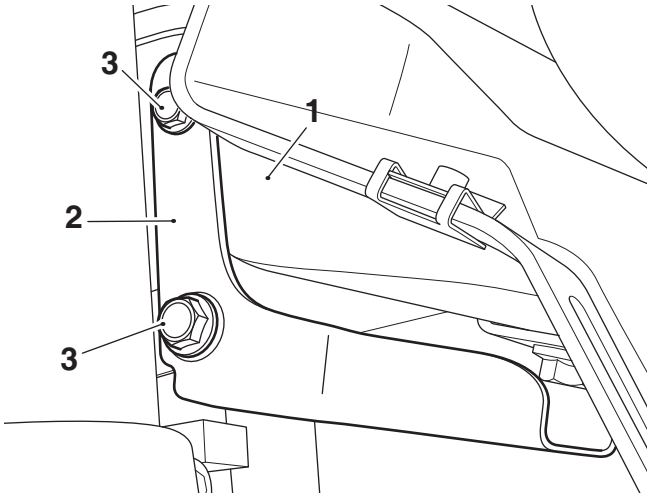

1. **Sub-frame mounting**
2. **Mounting bracket**
3. **Fixings**

13. Position the right hand upper engine bar on to the lower engine bar on the right hand side of the motorcycle as shown below. Fit a clamp and two original M8 x 30 mm fixings to retain the upper engine bar. Do not fully tighten the fixings at this stage.

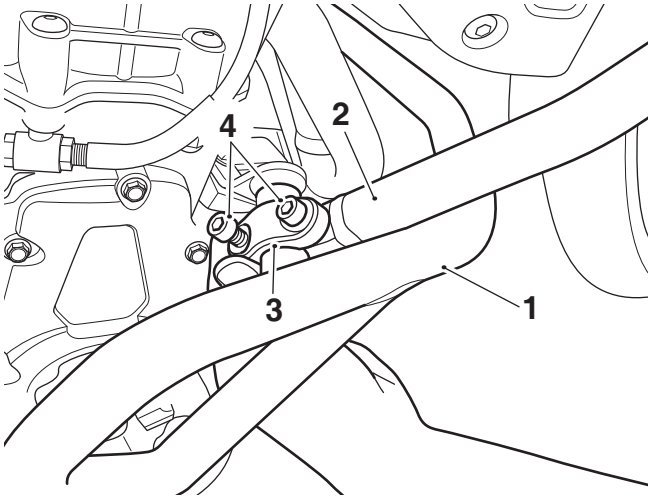

1. **Lower engine bar**
2. **Upper engine bar, right hand**
3. **Clamp**
4. **Fixings, M8 x 30 mm**

14. Repeat step 13 for the left hand upper engine bar.

15. Position the left hand upper engine bar front mounting under the right hand upper engine bar front mounting, as shown.

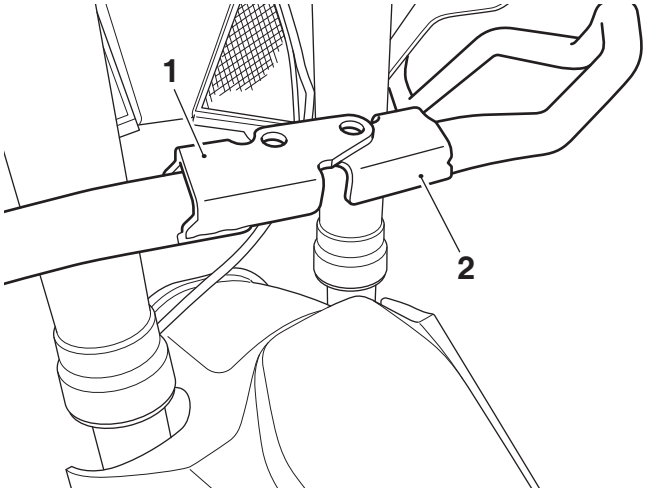

1. **Upper engine bar, right hand**
2. **Upper engine bar, left hand**

16. Align the right hand and left hand upper engine bars with the front mounting bracket and fit the original M6 x 20 mm fixings. Tighten the fixings to **14 Nm**.

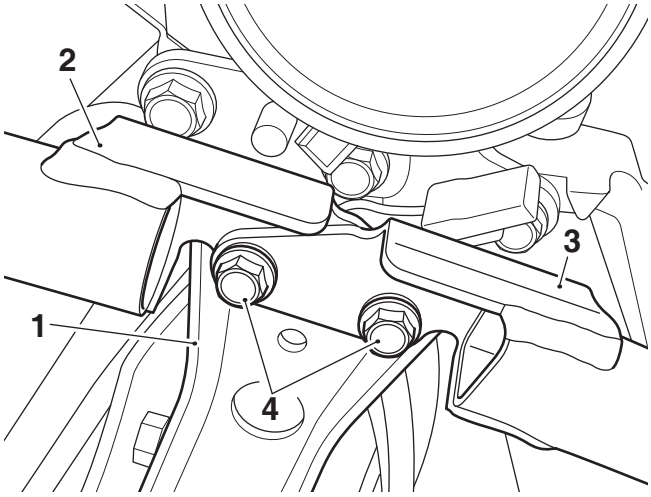

1. **Front mounting bracket**
2. **Upper engine bar, right hand**
3. **Upper engine bar, left hand**
4. **Fixings, M6 x 20 mm**

17. Tighten the right hand engine bar clamp front fixing first to **20 Nm**, then tighten the clamp rear fixing to **20 Nm**.

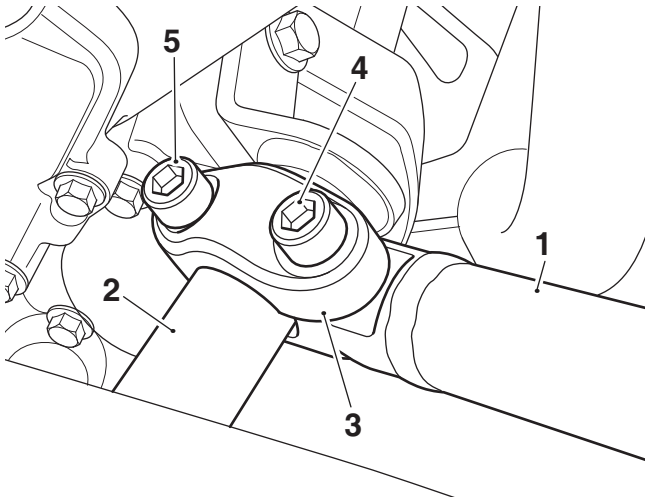

1. **Upper engine bar**
2. **Lower engine bar**
3. **Clamp**
4. **Fixing, front**
5. **Fixing, rear**

18. Repeat step 17 for the left hand engine bar clamp fixings.

Note:

- **The mounting clamps are marked with L (left hand) and R (right hand)**

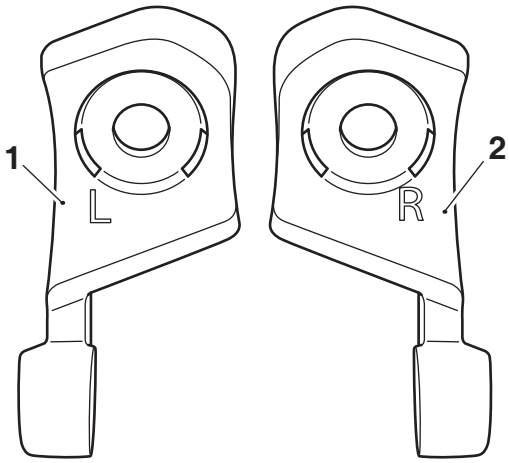

1. **Mounting clamp, left hand**
2. **Mounting clamp, right hand**

19. Fit the left hand mounting clamp from the kit to the left hand upper engine bar as shown. Fit an M6 x 20 mm fixing from the kit. Tighten to **8 Nm**.

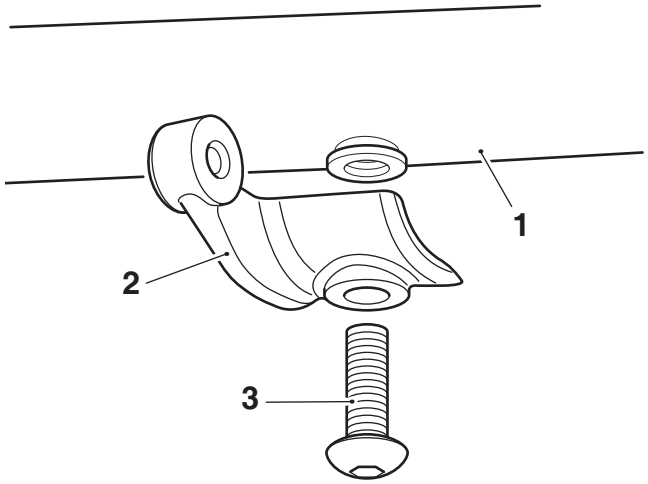

1. **Upper engine bar, left hand**
2. **Mounting clamp, left hand**
3. **Fixing, M6 x 20 mm**

20. Align the fixing holes of the left hand fog light shroud, plastic clamp and left hand mounting clamp in the orientation shown and fit an M5 x 20 mm fixing from the kit. Do not fully tighten the fixing at this stage.

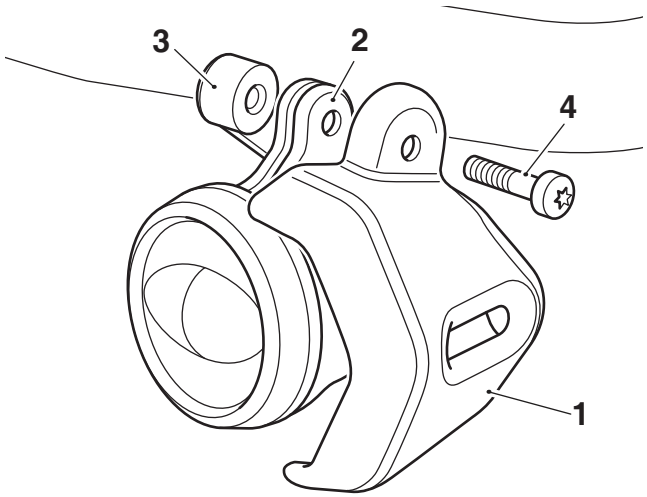

1. **Fog light shroud, left hand**
2. **Plastic clamp**
3. **Mounting clamp**
4. **Fixing, M5 x 20 mm**

21. Collect a Ø 13 mm grommet from the kit and place over the left hand fog light harness.

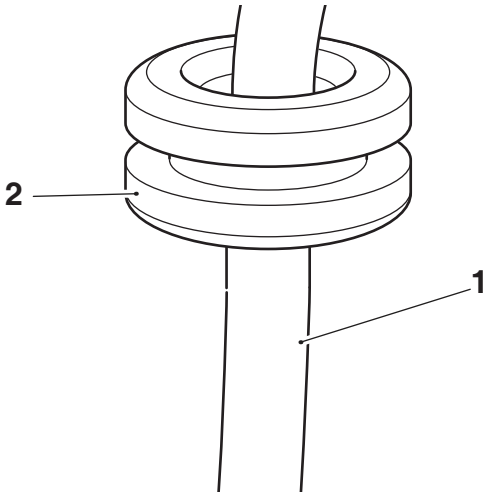

1. **Fog light harness**
2. **Grommet, Ø 13 mm**

22. Locate the grommet into the rear of the left hand fog light shroud, as shown.

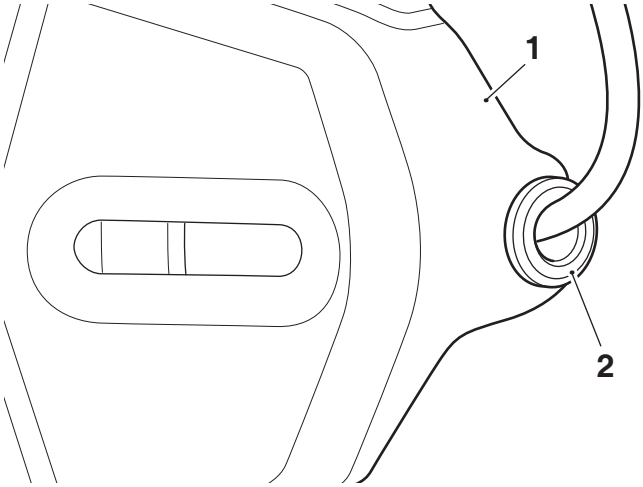

1. **Fog light shroud**
2. **Grommet**

23. Collect a Ø 20 mm grommet from the kit and locate it into the hole in the upper engine bar next to the left hand fog light mounting clamp.

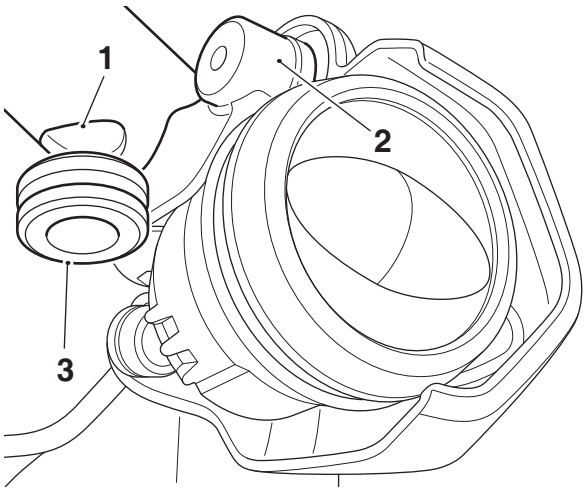

1. **Hole, upper engine bar**
2. **Mounting clamp**
3. **Grommet, Ø 20 mm**

24. Route the left hand fog light harness through the grommet in the upper engine bar until it exits the open end of the engine bar as shown.

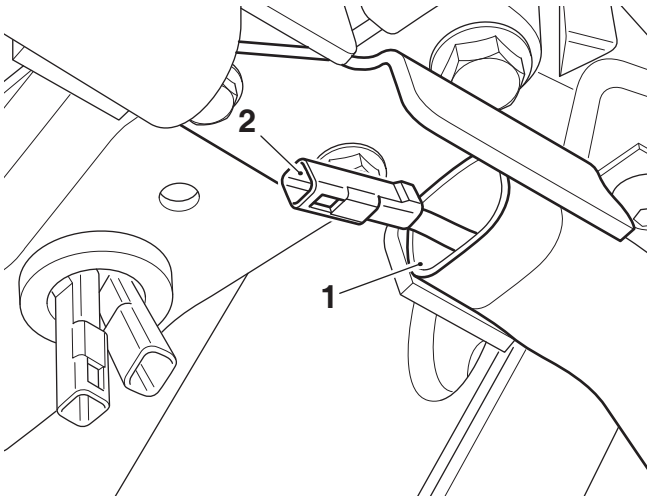

1. **Upper engine bar, left hand**
2. **Fog light harness, left hand**

25. Repeat steps 19 to 24 for the right hand side.

26. Connect the right hand fog light harness to the right hand connector on the main wiring harness and the left hand fog light harness to the left hand connector on the main wiring harness.

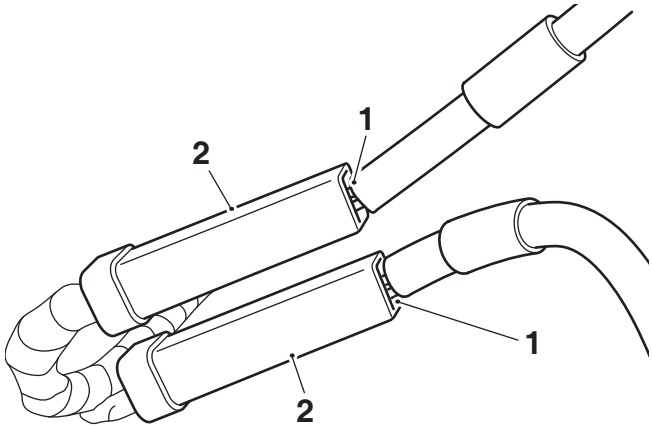

1. **Fog light harness connector**
2. **Main wiring harness connector**

27. Place both fog light main wiring harness connectors back into the retaining features in the cable tidy moulding.

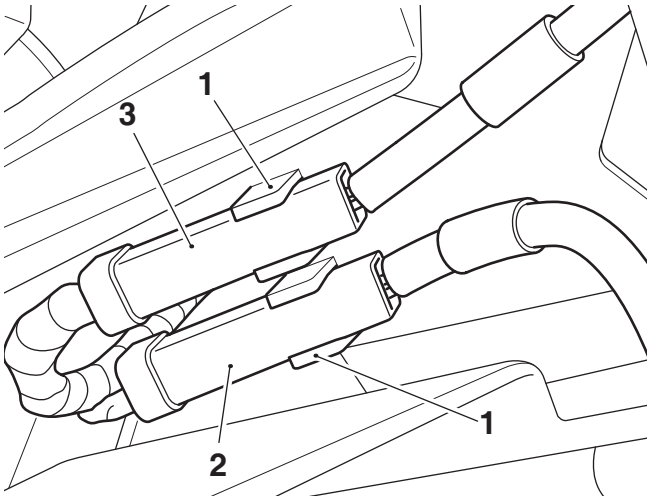

1. **Retaining features, cable tidy moulding**
2. **Fog light connector, left hand**
3. **Fog light connector, right hand**

28. Feed the excess fog light harness back through the grommet in the front mounting bracket.
29. Adjust the position of the left hand and right hand fog lights until the front face is vertical. Tighten the M5 x 20 mm fixings to **6 Nm**.
30. Refit the beak assembly as described in the Service Manual.

31. Reconnect the battery, as described in the Service Manual.
32. Refit the rider and passenger seats, as described in the Service Manual.

Fitment of the Fog Light Conversion Kit A9830210

1. Disconnect the horn harness from the horn which is located behind the beak.

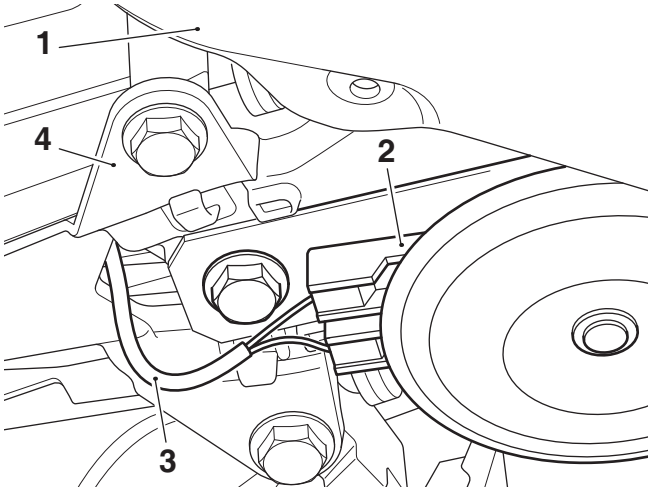

1. **Beak**
2. **Horn**
3. **Horn harness**
4. **Cable tidy moulding**

2. Unclip the fog light connectors from the cable tidy moulding, located rearward of the horn.

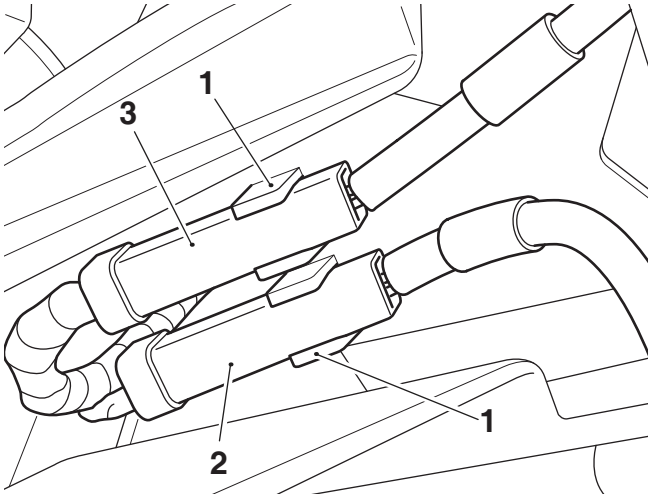

1. **Cable tidy moulding**
2. **Fog light connector, left hand**
3. **Fog light connector, right hand**

3. Disconnect the left hand fog light harness connector and right hand fog light harness connector from the main wiring harness connectors.

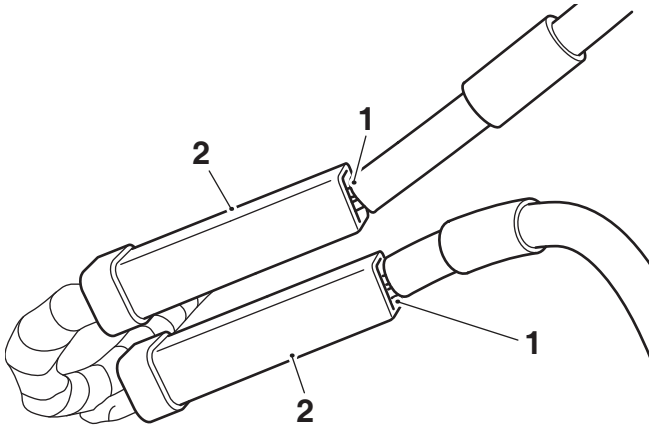

1. **Fog light harness connector**
2. **Main wiring harness connector**

4. Remove the left hand end cap from the mounting bar by carefully levering back the retaining features on the end cap to disengage them from the mounting bar.

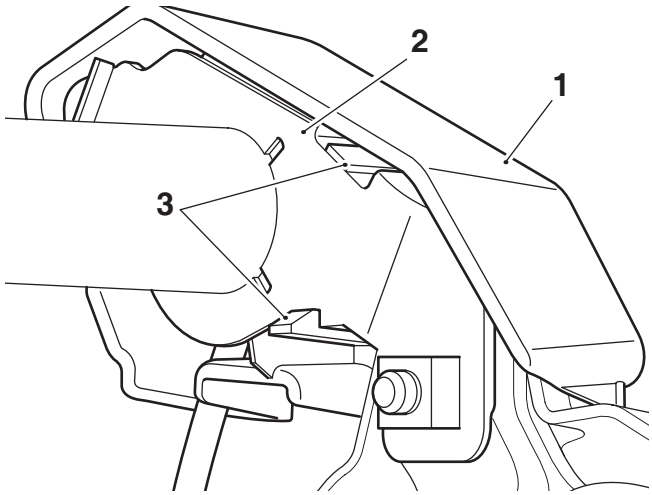

1. **End cap, left hand**
2. **Mounting bar**
3. **Retaining features**

5. Carefully pull the left hand fog light harness through the grommet and out of the mounting bar.

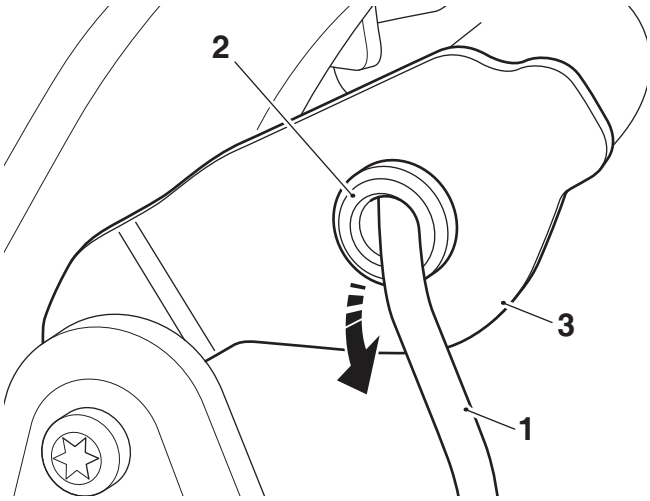

1. **Fog light harness, left hand**
2. **Grommet**
3. **Mounting bar**

6. Remove the left hand fog light shroud, plastic clamp and fog light from the mounting bar. Retain the fog light, plastic clamp and shroud for reuse, discard the fixing.

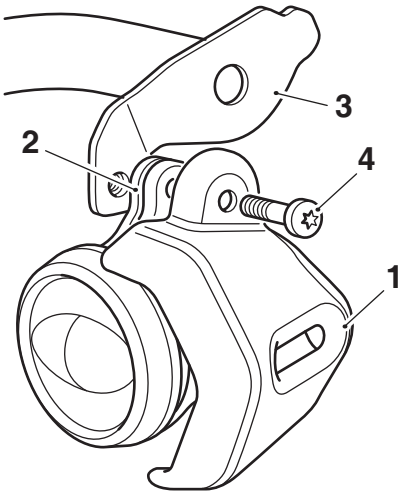

1. **Fog light shroud, left hand**
2. **Plastic clamp**
3. **Mounting bar**
4. **Fixing**

7. Repeat steps 4 to 6 for the right hand side.

8. Remove the fog light mounting bar and horn bracket from the motorcycle. Retain the mounting bar for reuse if the motorcycle is to be returned to its original condition. Retain the horn and centre fixing for reuse, discard the outer fixings.

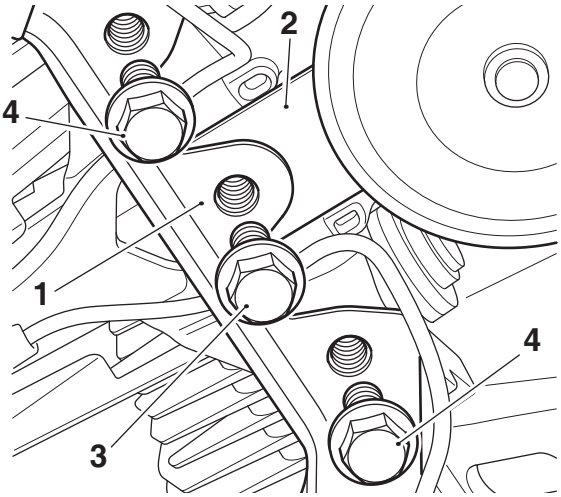

1. **Mounting bar**
2. **Horn bracket**
3. **Centre fixing**
4. **Outer fixings**

9. Collect the M8 x 20 mm encapsulated fixings from the kit and fit into the outer mounting points, as shown. Refit the horn bracket with the original centre fixing.

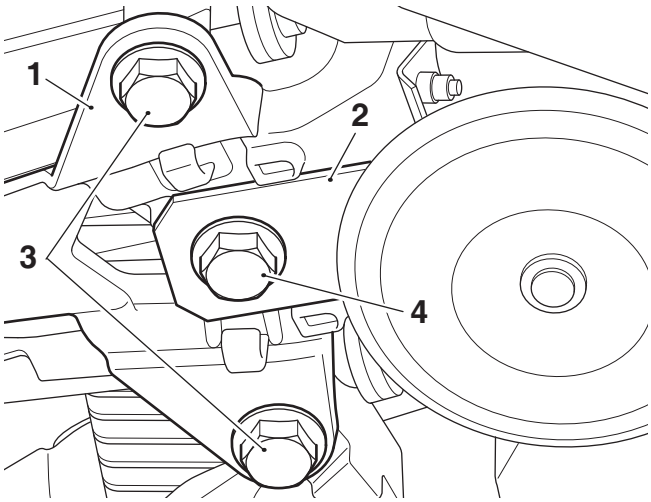

1. **Cable tidy moulding**
2. **Horn bracket**
3. **Fixings, M8 x 20 mm, encapsulated**
4. **Original fixing**

10. Tighten the centre fixing to **18 Nm**. Tighten the outer fixings to **20 Nm**.

11. Reconnect the horn harness to the horn.

12. Fit the Ø 26 mm grommet from the kit into the front mounting bracket from the upper engine bar kit, as shown.

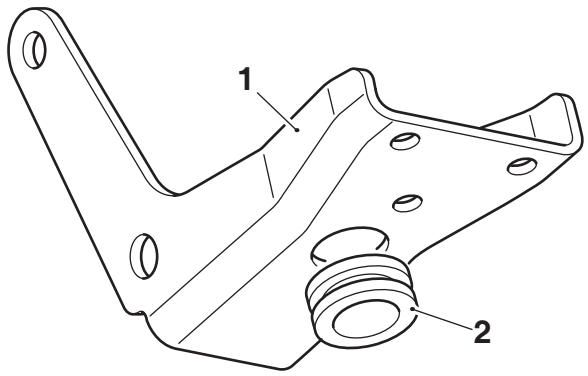

1. **Front mounting bracket**
2. **Grommet, Ø 26 mm**

13. Route both fog light harness connectors through the grommet in the mounting bracket, noting which is the left hand and right hand connectors.

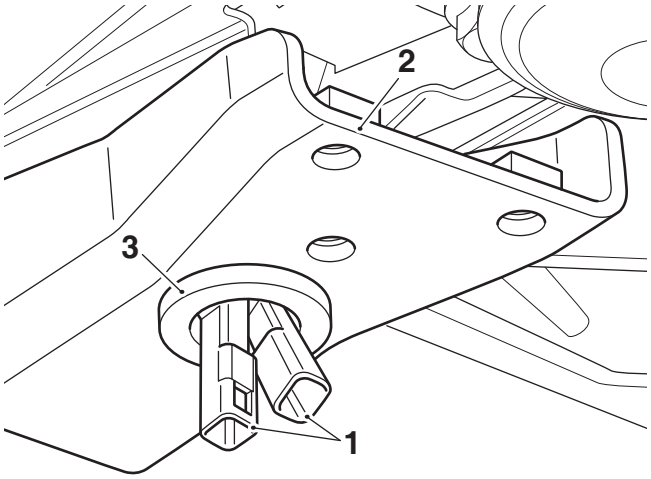

1. **Fog light harness connectors**
2. **Mounting bracket**
3. **Grommet, Ø 26 mm**

14. Fit the front mounting bracket onto the subframe mounting as shown. Secure with the original fixings and lock nuts. Tighten the fixings to **30 Nm**.

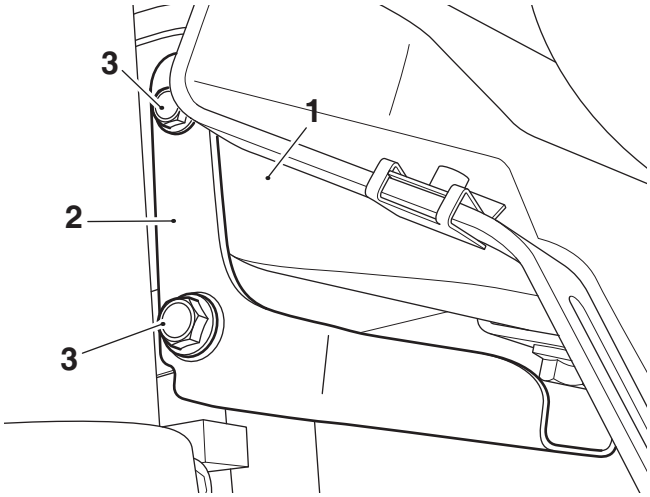

1. **Sub-frame mounting**
2. **Mounting bracket**
3. **Fixings**

15. Position the right hand upper engine bar on to the lower engine bar on the right hand side of the motorcycle as shown below. Fit a clamp and two original M8 x 30 mm fixings to retain the upper engine bar. Do not fully tighten the fixings at this stage.

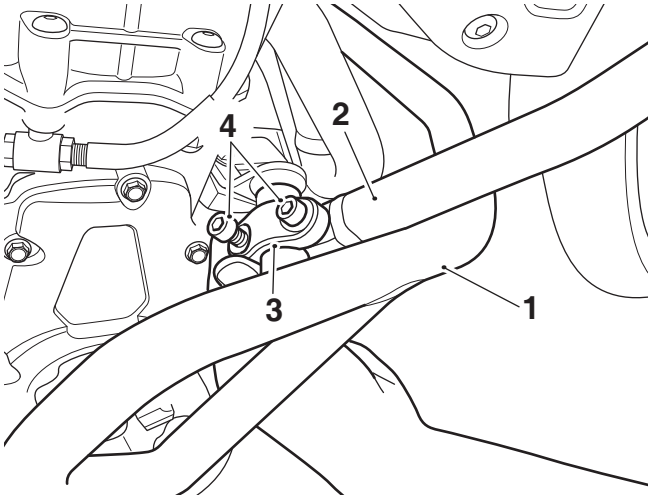

1. **Lower engine bar**
2. **Upper engine bar, right hand**
3. **Clamp**
4. **Fixings, M8 x 30 mm**

16. Repeat step 15 for the left hand upper engine bar.

17. Position the left hand upper engine bar front mounting under the right hand upper engine bar front mounting, as shown.

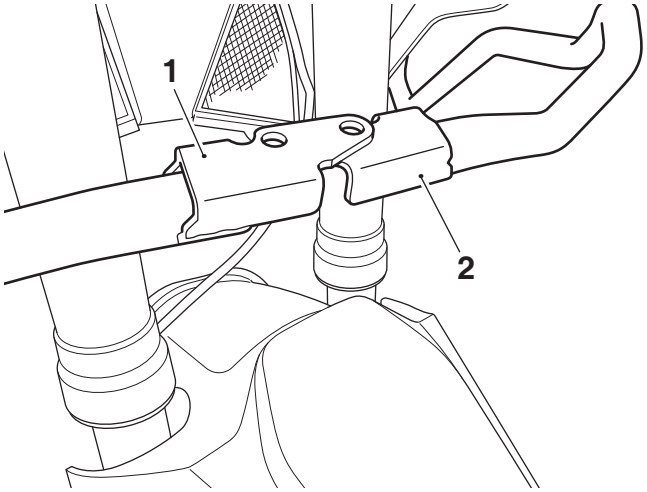

1. **Upper engine bar, right hand**
2. **Upper engine bar, left hand**

18. Align the right hand and left hand upper engine bars with the front mounting bracket and fit the original M6 x 20 mm fixings. Tighten the fixings to **14 Nm**.

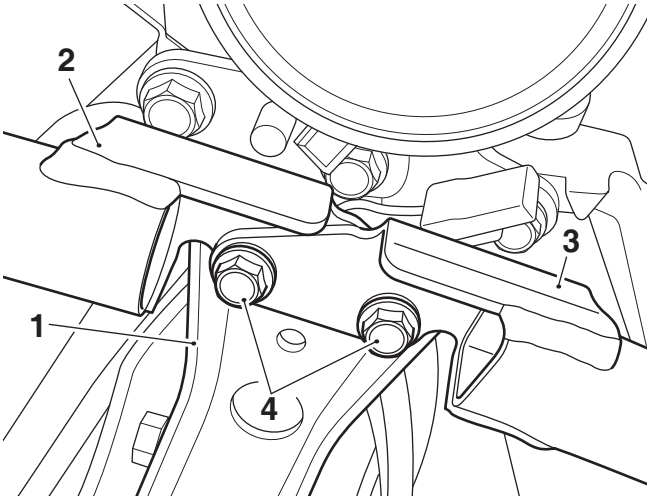

1. **Front mounting bracket**
2. **Upper engine bar, right hand**
3. **Upper engine bar, left hand**
4. **Fixings, M6 x 20 mm**

19. Tighten the right hand engine bar clamp front fixing first to **20 Nm**, then tighten the clamp rear fixing to **20 Nm**.

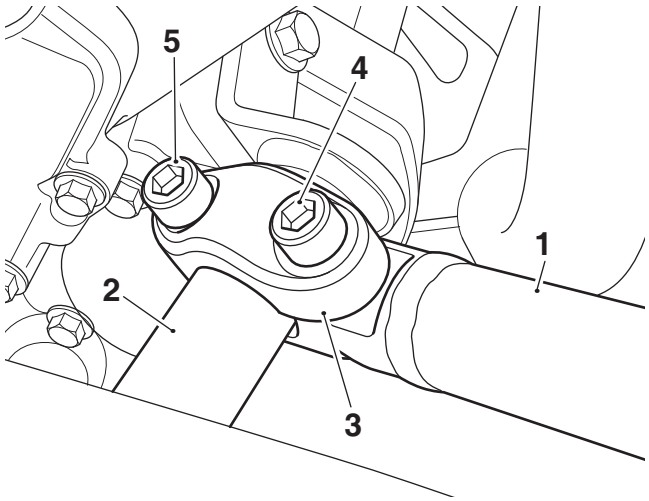

1. **Upper engine bar**
2. **Lower engine bar**
3. **Clamp**
4. **Fixing, front**
5. **Fixing, rear**

20. Repeat step 19 for the left hand engine bar clamp fixings.

Note:

- **The mounting clamps are marked with L (left hand) and R (right hand)**

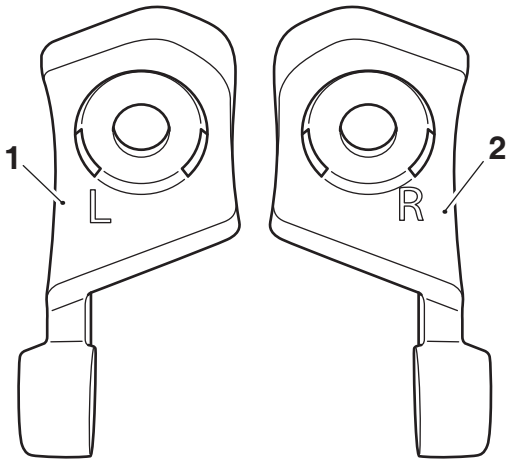

1. **Mounting clamp, left hand**
2. **Mounting clamp, right hand**

21. Fit the left hand mounting clamp from the kit to the left hand upper engine bar as shown. Fit an M6 x 20 mm fixing from the kit. Tighten to **8 Nm**.

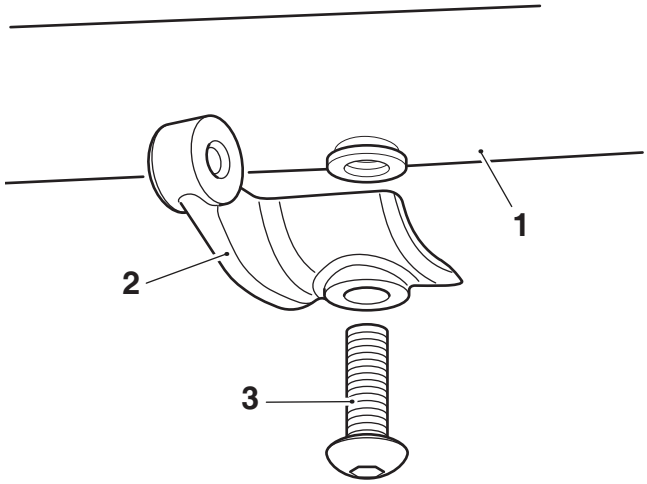

1. **Upper engine bar, left hand**
2. **Mounting clamp, left hand**
3. **Fixing, M6 x 20 mm**

22. Align the fixing holes of the left hand fog light shroud, plastic clamp and left hand mounting clamp in the orientation shown and fit an M5 x 20 mm fixing from the kit. Do not fully tighten the fixing at this stage.

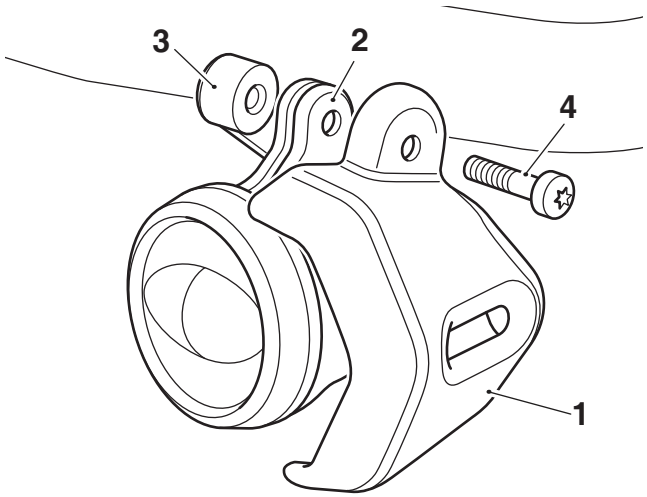

1. **Fog light shroud, left hand**
2. **Plastic clamp**
3. **Mounting clamp**
4. **Fixing, M5 x 20 mm**

23. Collect a Ø 20 mm grommet from the kit and locate it into the hole in the upper engine bar next to the left hand fog light mounting clamp.

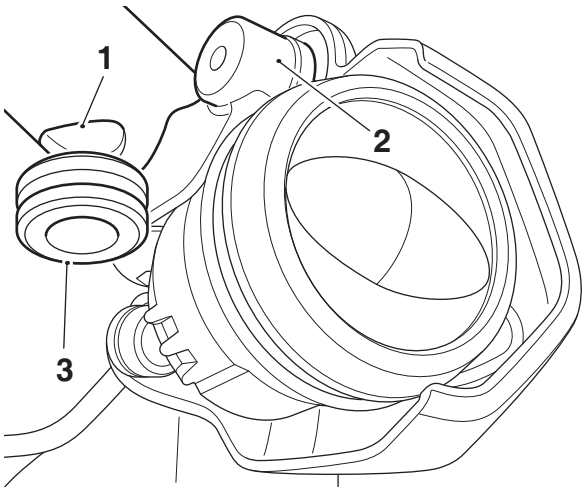

1. **Hole, upper engine bar**
2. **Mounting clamp**
3. **Grommet, Ø 20 mm**

24. Route the left hand fog light harness through the grommet in the upper engine bar until it exits the open end of the engine bar as shown.

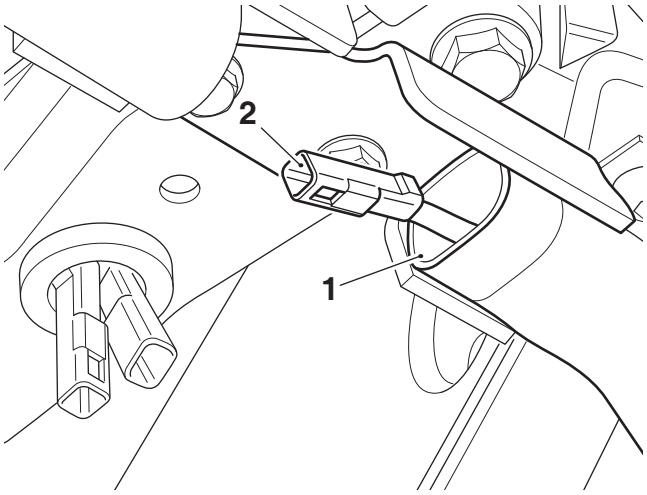

1. **Upper engine bar, left hand**
2. **Fog light harness, left hand**

25. Repeat steps 21 to 24 for the right hand side.

26. Connect the right hand fog light harness to the right hand connector on the main wiring harness and the left hand fog light harness to the left hand connector on the main wiring harness.

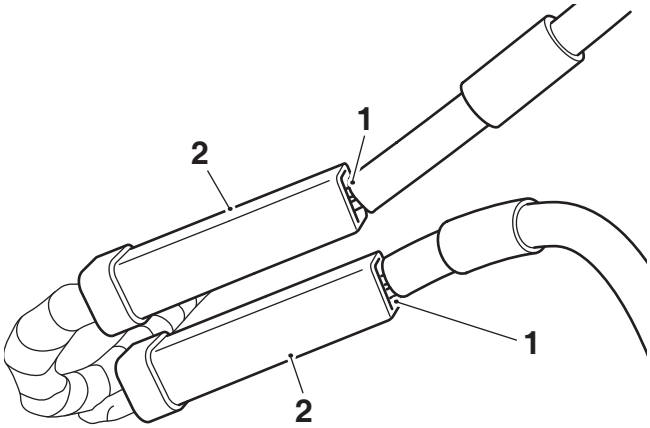

1. **Fog light harness connector**
2. **Main wiring harness connector**

27. Place both fog light main wiring harness connectors back into the retaining features in the cable tidy moulding.

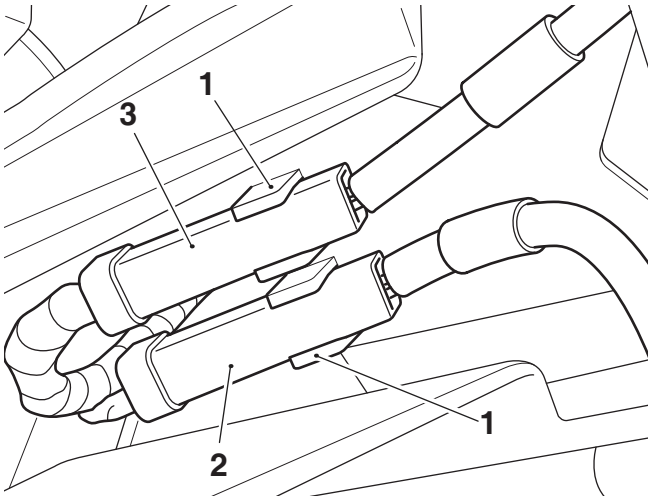

1. **Retaining features, cable tidy moulding**
2. **Fog light connector, left hand**
3. **Fog light connector, right hand**

28. Feed the excess fog light harness back through the grommet in the front mounting bracket.
29. Adjust the position of the left hand and right hand fog lights until the front face is vertical. Tighten the M5 x 20 mm fixings to **6 Nm**.
30. Refit the beak assembly as described in the Service Manual.
31. Reconnect the battery, as described in the Service Manual.
32. Refit the rider and passenger seats, as described in the Service Manual.

Fog Light System Testing

Note:

- **The fog lights switch is incorporated into the left hand switch housing, as shown.**

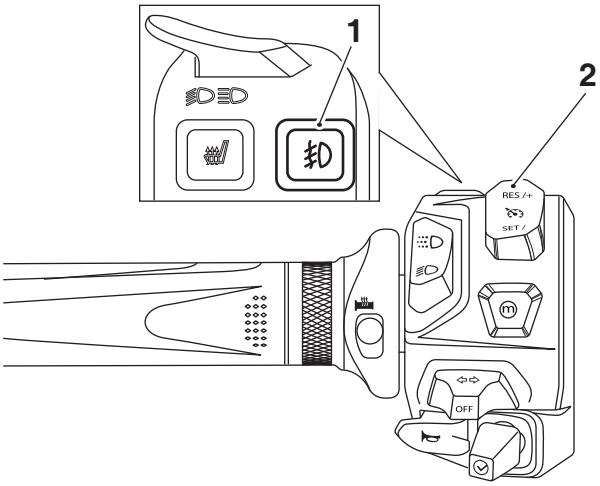

1. **Fog lights switch**
2. **Left hand switch housing**

- **The fog lights switch will only operate when the headlights are on.**
- **The fog lights switch will reset to OFF when the ignition is turned off, then on again.**
- **To turn the fog lights ON or OFF, with the headlights on, press and release the fog lights switch. When the fog lights are turned on, the fog light indicator will illuminate in the multi-function display.**

1. Operate the fog lights switch and check that the fog lights come on. While sitting on the motorcycle, check the fog light alignment against a wall. If the angle of the fog lights needs adjusting, repeat step 29.

Operation

The fog lights will remain on when the engine is turned off using the engine stop switch. When the engine is not running turn off the ignition, or switch the fog lights off to avoid draining the battery.

The fog lights are protected by a chassis ECM which will automatically cut power in the event of an overload.

Power can be restored to the fog lights by turning the ignition switch off, then on again, provided that the condition that caused the fault has been rectified.

In the event of a more serious overload, fuse number PS 1 protects the fog lights. Refer to the label in the fuse box lid for fuse amperage.

Warning

If, after fitment of this accessory kit, you have any doubt about the performance of any aspect of the motorcycle, contact an authorised Triumph dealer and do not ride the motorcycle until the authorised dealer has declared it fit for use. Riding a motorcycle when there is any doubt as to any aspect of the performance of the motorcycle may result in loss of control of the motorcycle leading to an accident.

Warning

Never ride an accessory equipped motorcycle at speeds above 80 mph (130 km/h).

The presence of accessories will cause changes in the stability and handling of the motorcycle. Failure to allow for changes in motorcycle stability may lead to loss of control or an accident.

Remember that the 80 mph (130 km/h) limit will be reduced by the fitting of non-approved accessories, incorrect loading, worn tires, overall motorcycle condition and poor road or weather conditions.

Warning

The motorcycle must not be operated above the legal road speed limit except in closed-course conditions.

Warning

Only operate this Triumph motorcycle at high speed in closed-course, on-road competition or on closed-course racetracks. High-speed operation should only be attempted by riders who have been instructed in the techniques necessary for high-speed riding and are familiar with the motorcycle's characteristics in all conditions.

High-speed operation in any other circumstances is dangerous and will lead to loss of motorcycle control and an accident.